No of Pages : 3 Course Code : 23MX22

Roll No:
(To be filled in by the candidate)

PSG COLLEGE OF TECHNOLOGY, COIMBATORE 641 004

SEMESTER EXAMINATIONS, JUNE 2025

MCA Semester : 2

23MX22 DESIGN AND ANALYSIS OF ALGORITHMS

Time : 3 Hours **Maximum Marks :100**

INSTRUCTIONS:

1. Answer **ALL** questions. Each question carries 25 Marks.
2. Subdivisions (a) carries 5 marks each, subdivision (b) carries 8 marks each and subdivision (c) carries 12 marks each.
3. Course Outcome : Table

Qn.1	CO1	Qn.2	CO2	Qn.3	CO3	Qn.4	CO4

COs	At the end of learning this course, students will be able to
CO1	Efficiently use balanced binary and multi way search trees to store and retrieve data.
CO2	Formulate algorithms to solve complex problems using divide and conquer and greedy method of algorithm design.
CO3	Apply dynamic programming to solve optimization problems.
CO4	Apply backtracking and branch and bound techniques to solve complex problems by systematically exploring possible solutions.

Question **(BTL)**

1. a) Define M-way search trees. What is a B tree? Consider the B tree of order 3 shown in Figure 1. How many keys need to be inserted to increase the height of the tree by one level? Similarly, how many keys need to be deleted to reduce the height by one level? (L3)

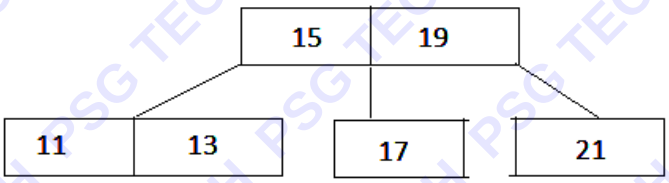

Figure 1

b) Create a B+ tree of order 5 by inserting the following numbers one by one in the given order: 16, 18, 14, 20, 12, 22, 10, 24, 8, 6, 15, 11, 26 and 30. Show the tree after deleting 16, 8 and 15. (L3)

c) What is an AVL tree? What are the different types of rotations used to maintain its balance? What is the height of AVL tree with n nodes? Starting from an empty tree construct an AVL tree for the following keys 15, 19, 21, 13, 10, 23, 22, 5, 7. Delete the keys 22, 21, 13 and 10 successively from the tree. Show the resultant tree (L4)

2. a) Communication engineer Sara is developing a compression algorithm for text transmission. She has collected the frequency of occurrence for each character in a message as follows: (L2)

Character	Frequency
A	40
P	9
Q	2
L	10
E	16
S	13

Suggest a suitable coding system and using the same, find the codes of characters given in the table. Illustrate how the message “APPLE" would be encoded using the generated Huffman codes and how it would be decoded back to the original message.

b) Write the control abstraction for divide and conquer method of algorithm design. Explain how divide and conquer principle can be applied to perform binary search. Write a recursive algorithm for binary search. Give the corresponding recurrence relation and find the time complexity. Draw the binary decision tree for n= 14 (L3)

c) i) 1) Describe Greedy approach to solve an optimization problem. Write the pseudo code describing the subset paradigm. (4) (L2)

2) Write Prim’s algorithm to construct minimum cost spanning tree of a graph. Find the minimum cost spanning tree for the graph given in Figure 2 by tracing the algorithm. (8) (L4)

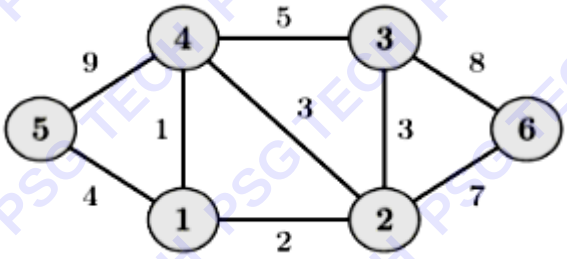

Figure 2

(OR)

ii) Write an algorithm for Merge sort. Trace the algorithm to sort the following numbers: 67, 12, 89, 43, 23, 78, 54, 36, 91 and 10. Write the recurrence relation describing the best case and worst case and indicate the complexity in both cases. (L3)

Draw the tree of calls for merge() and mergeSort().

3. a) A writer has submitted an initial draft of an article to a small online publication. After initial review, the senior editor asked the writer to transform the string_X= “rain” to string_Y=”shine”, in the article. Find the minimum- cost edit sequence that transforms the string X to string Y. (L3)

b) Traveller Arun is visiting Chennai for the first time. From the hotel, he plans to visit three major tourist attractions located in Marina Beach, Kapaleeshwarar Temple, and Fort St. George in the city and return back to his hotel, without revisiting the places again. The distance between the locations are given by the following adjacency matrix. The edge lengths are given in the matrix. Using the Principles of Dynamic Programming, determine an optimal tour and its length. (L4)

	Hotel	Marina Beach	Kapaleeshwarar Temple	Fort St. George
Hotel	0	4	1	3
Marina Beach	4	0	2	1
Kapaleeshwarar Temple	1	2	0	5
Fort St. George	3	1	5	0

c) i) Consider the multistage graph given in Figure 3. Find the shortest path from source (S) to destination (T). Write the algorithm for the same. (L3)

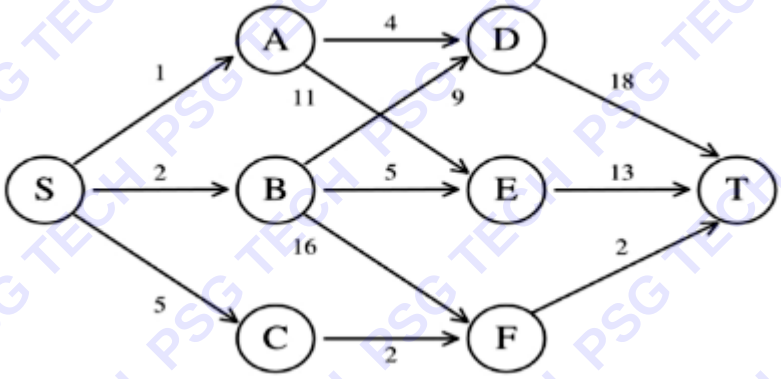

Figure 3

(OR)

ii) Explain how the longest common subsequence problem can be solved using dynamic programming. Show that it holds Principle of Optimality. Given two strings, X= "STONE" and Y="LONGEST", find the longest common subsequence and its length using Dynamic Programming. Show the intermediate steps. (L3)

4. a) What is a state space tree? Define the terms live node, dead node and E node. How is E-node chosen in Backtracking and Branch and Bound methods? (L2)

b) Draw the state space tree generated using Backtracking for the following instance of sum of subsets problem: N=3, m=10, w[1:3]={3, 7, 10}. Write the algorithm for the same. (L3)

c) Solve the following Knapsack problem using LC Branch-and-Bound approach. A logistics company, CargoMax, is tasked to load a delivery truck which has a limited weight capacity and several packages to be delivered, each with a known weight and profit associated with it. CargoMax needs to maximize the total profit while ensuring that the total weight does not exceed the truck's capacity. The company is given the following data for the delivery: Draw the state space tree and give a brief note describing the steps in generating the tree. (L4)

Number of packages: n = 5

Maximum weight capacity of the truck: m = 12

Weights of the packages: w = [4, 6, 3, 4, 2]

Profits of the packages: p = [10, 15, 6, 8, 4]

CO : COURSE OUTCOME; BTL : BLOOM'S TAXONOMY LEVEL

FD/RL /END/